VistaClad™ POCKET ASSEMBLY GUIDE.

RESIDENTIAL CLADDING ASSEMBLY

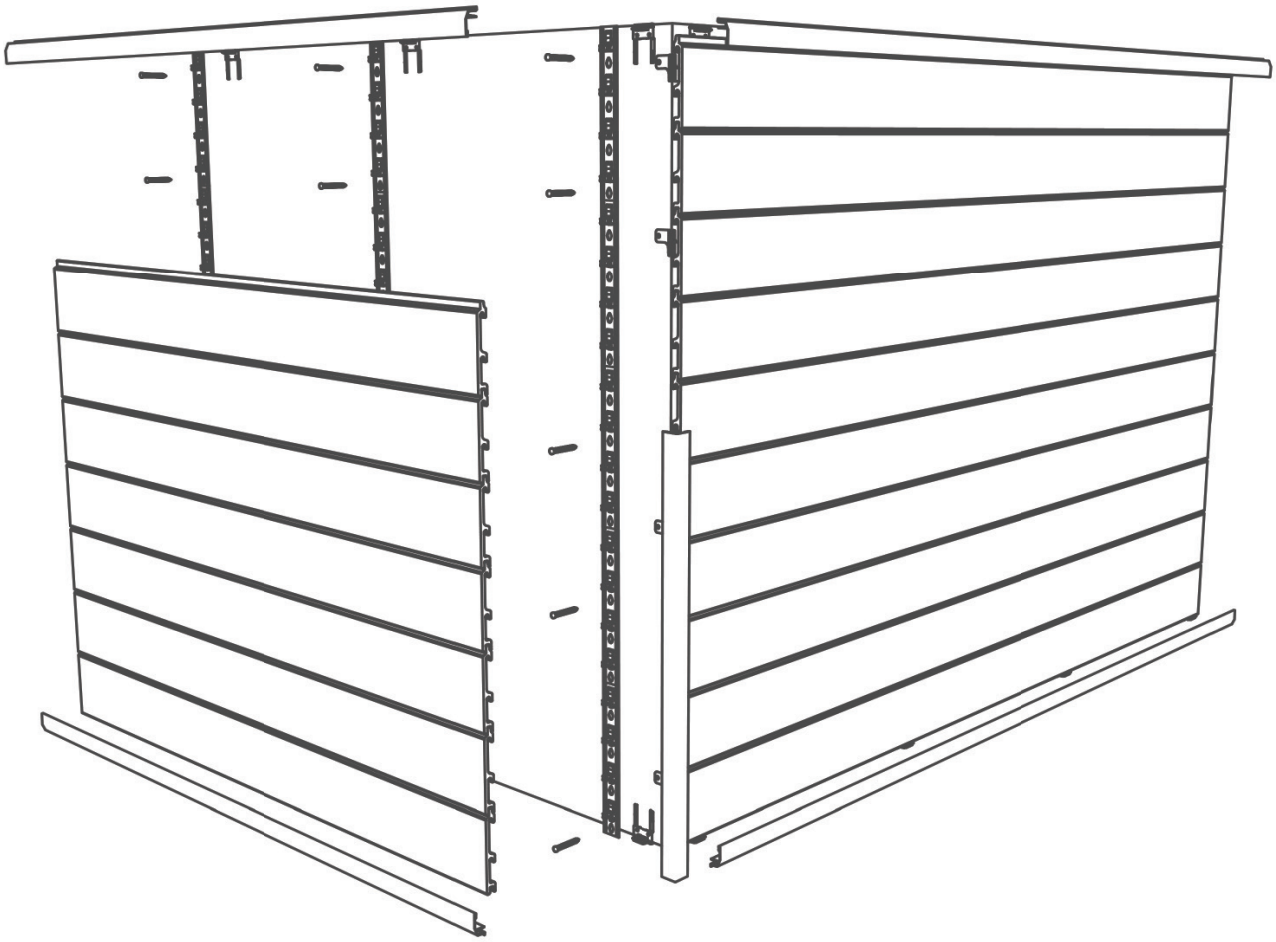

Follow this guide for the correct, straightforward assembly of VistaClad™ cladding system in a residential application.

Before you start

Ensure you have the required components for your specific project.

Primary components

Clip strip

Standard black or silver

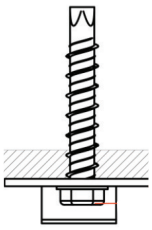

Clip strip fasteners

Type dependent on substrate

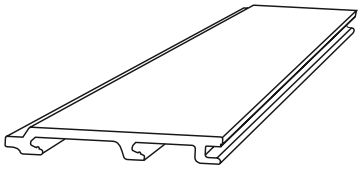

Cladding boards

Three size options

Secondary components

Adaptors	
A	Side adaptor
B	Top and bottom adaptor
C	External corner adaptor
D	Internal corner adaptor
Trim profiles	
1	U-trim profile
2	T-trim profile
3	Top and bottom trim profile
4	Outer corner trim profile
5	Inner corner trim profile
6	Edge trim profile

Adaptors

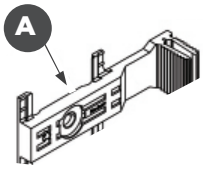

Fits trim 1

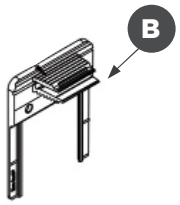

Fits trim 2

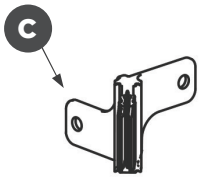

Fits trim 3

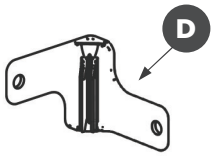

Fits trims 4 5 6

Trim profiles

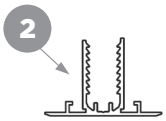

Fits adaptor B

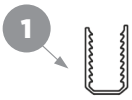

Fits adaptor A

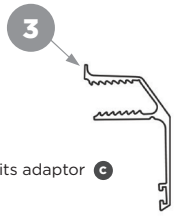

Fits adaptor C

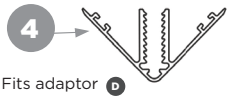

Fits adaptor D

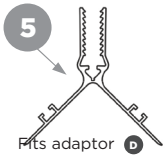

Fits adaptor D

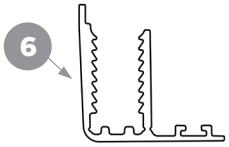

Fits adaptor D

Let’s get started.

Overview of substrate and weather resistant barrier.

Cladding assembly

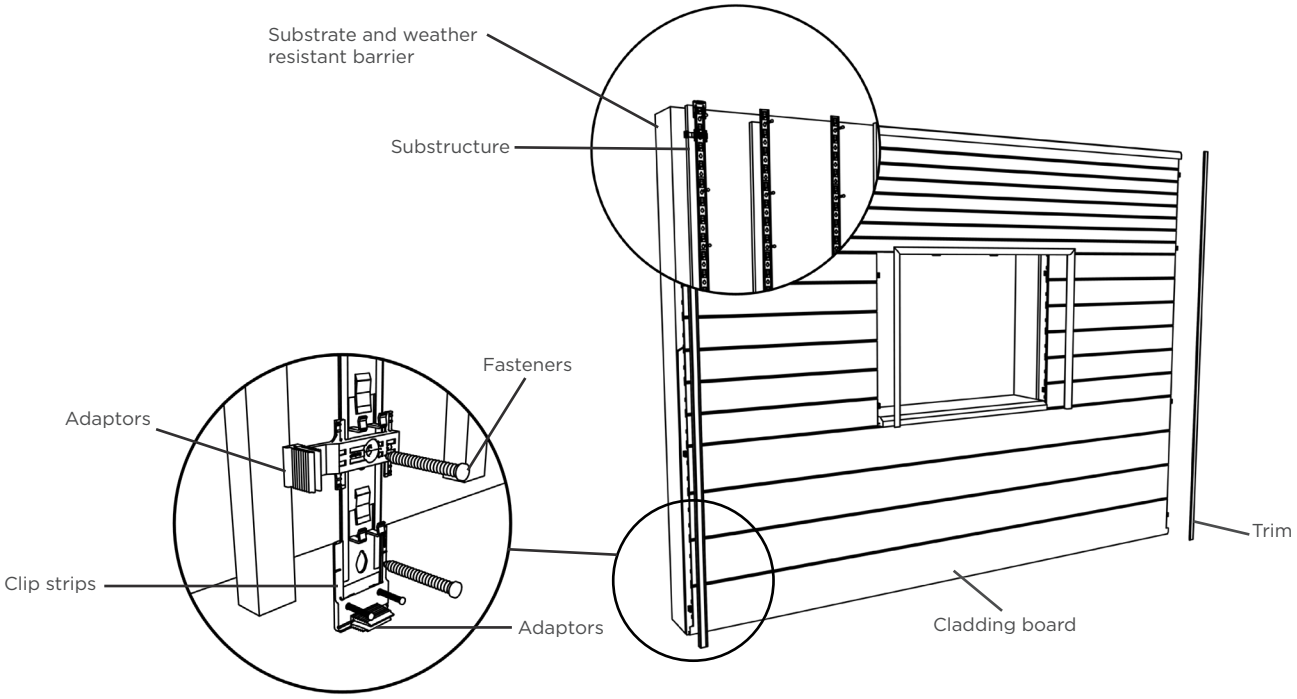

Ensure your substrate has waterproofing.

Completed installation

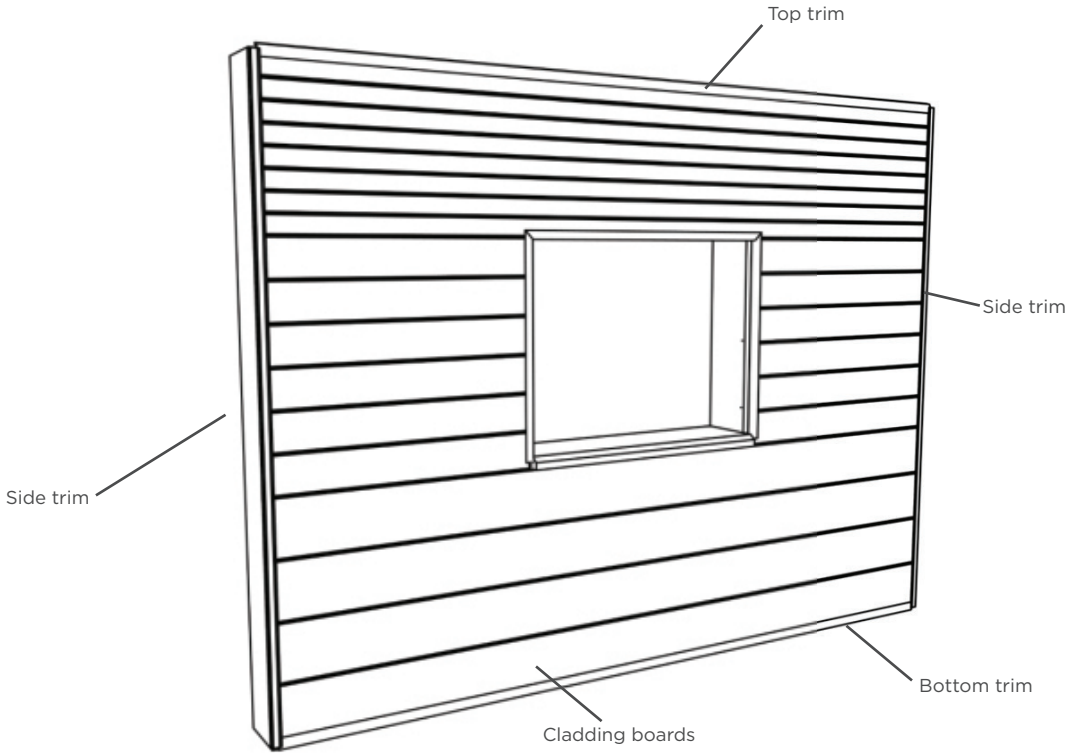

Step 1: Assess the structure and substrate for suitability.

Consult a qualified professional when assessing the structure.

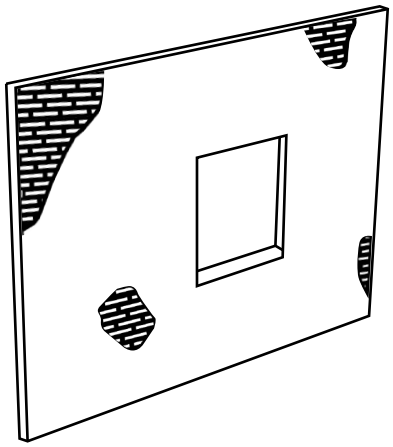

Masonry, concrete and similar frames

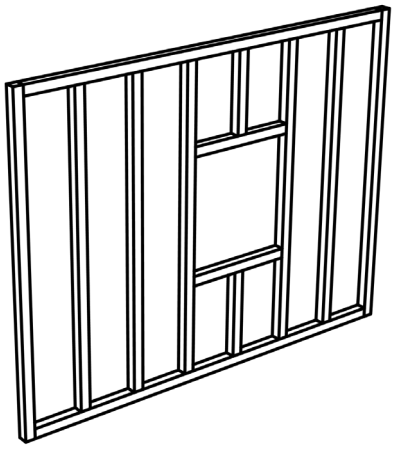

Timber frames

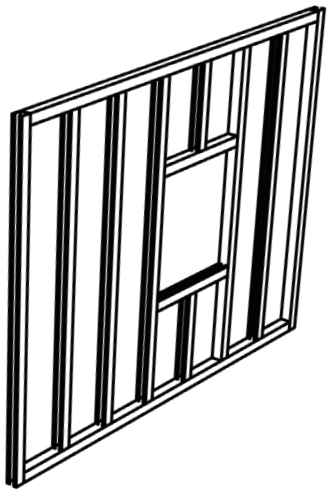

Structural steel frames

Suitable substructures

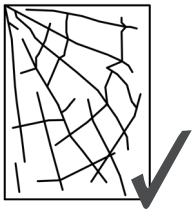

Structural timber

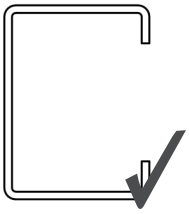

Structural steel

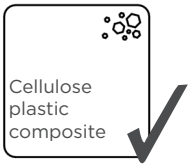

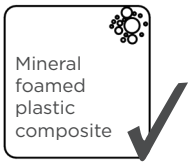

Composite batten

Suitable substrates

Masonry, concrete and similar can be suitable.

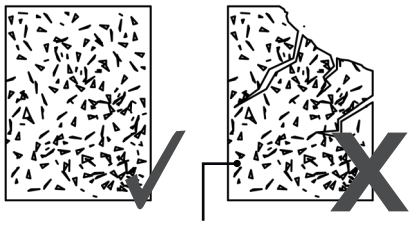

Uneven, cracked, spalling, low strength, or similar surfaces are unsuitable.

Surface quality

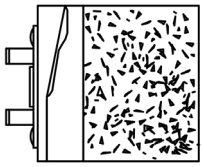

Ensure your ground surface is even and reliable.

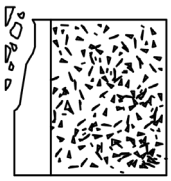

Avoid a poor-quality surface.

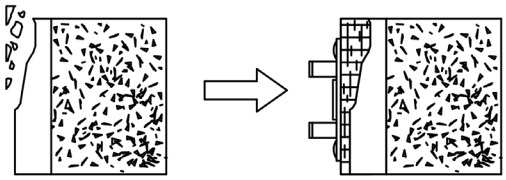

Ensure plaster is suitable. Remove or fill to level plaster.

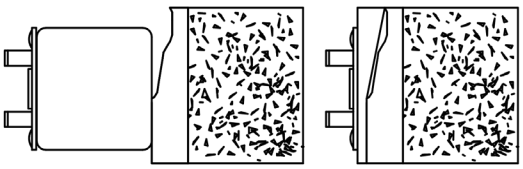

Ensure that clip strips are adequately supported. Use appropriate joists to level or provide structural support.

Step 2: Plan the board laying pattern.

Determining the number of boards needed for a project requires that the tongue and groove interaction be taken into account. The visible width for each profile is summarised in the table below and explained in the infographic on the right. The visible width of each profile is a multiple of 76.2 mm.

When planning the number of boards, allowances should be made for drainage, flashing and trim. The remaining height is the visible cladding height (Ht). Dividing this height by 76.2 provides an indication of the number of multiples required. If the result is not an integer, first attempt to manipulate the starting and end positions of the cladding or the drainage, flashing and trim. Alternatively, boards may need to be ripped, refer to Step 5. For each profile type, divide the number of multiples determined above by the number of multiples within the profile type (i.e. 1, 2 or 3 for the narrow, standard or wide boards respectively).

Profile	Profile width (mm)	Visible width (mm)	Depth (mm)	Maximum length (mm)	Mass per m (kg/m)
76.2	87	76.2 (76.2 x 1)	20.5	5 800	1.2
76.2 76.2	163	152.4 (76.2 x 2)	20.5	5 800	2.2
76.2 76.2 76.2	240	228.6 (76.2 x 3)	20.5	5 800	3.1

Ht = H3t + H2t + H1t
Ht = (4 x H3) + (6 x H2) + (8 x H1)

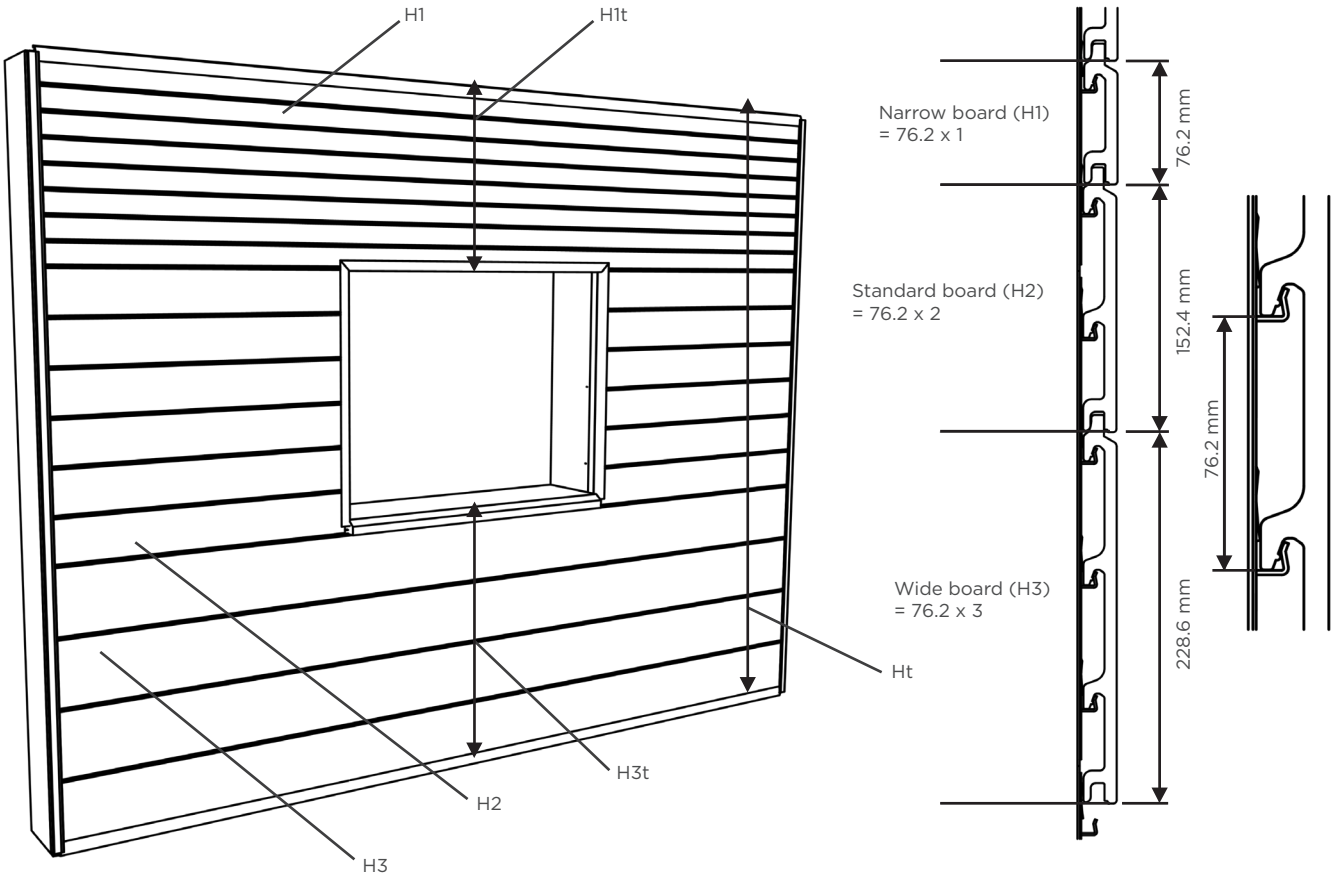

Potential laying patterns

VistaClad™ cladding boards are designed around a common multiple system. Profiles can, as a result, be mixed and matched to create patterns. Variations in textures and colours allow this approach to be expanded.

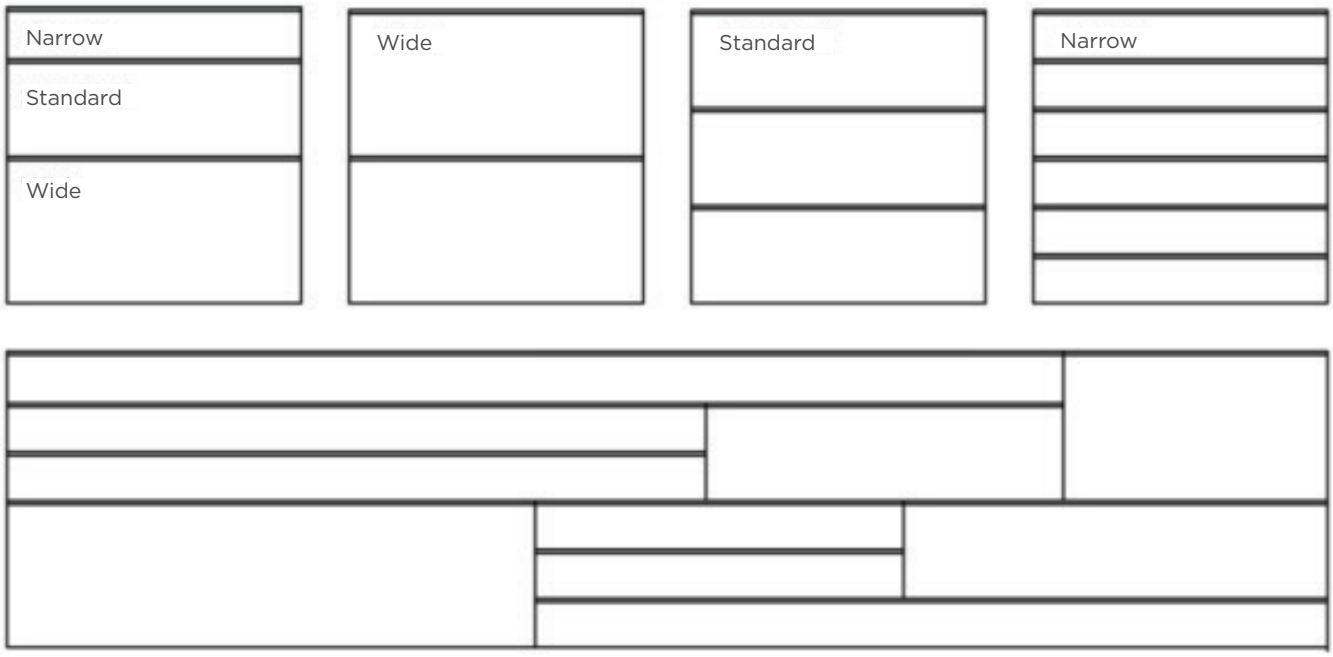

Note: Plan ahead to accommodate other systems.

Due to the variety of profiles and the adjustable depths for both the cladding and the trim system, VistaClad™ is compatible with many other surface finishes. When planning, allow for these interactions, particularly where there is a change in depth. Trim and flashing systems should be incorporated so that the integration between the different finishes is fluid. In these scenarios, the drainage of all the systems, as well as the interaction of multiple systems, must be considered with care.

Where the other surface protrudes off the substrate, the VistaClad™ system can be extended out to meet the finish. In these cases, the T and U trims (refer to Section 6b below) are better suited. Alternatively, flashing profiles can be used to blend the two systems.

For scenarios where the other surface finishes are shallower than the VistaClad™ system, the edge, U or top and bottom trim (refer to section 6a and 6b below) can allow for a clean finish between the two aesthetics.

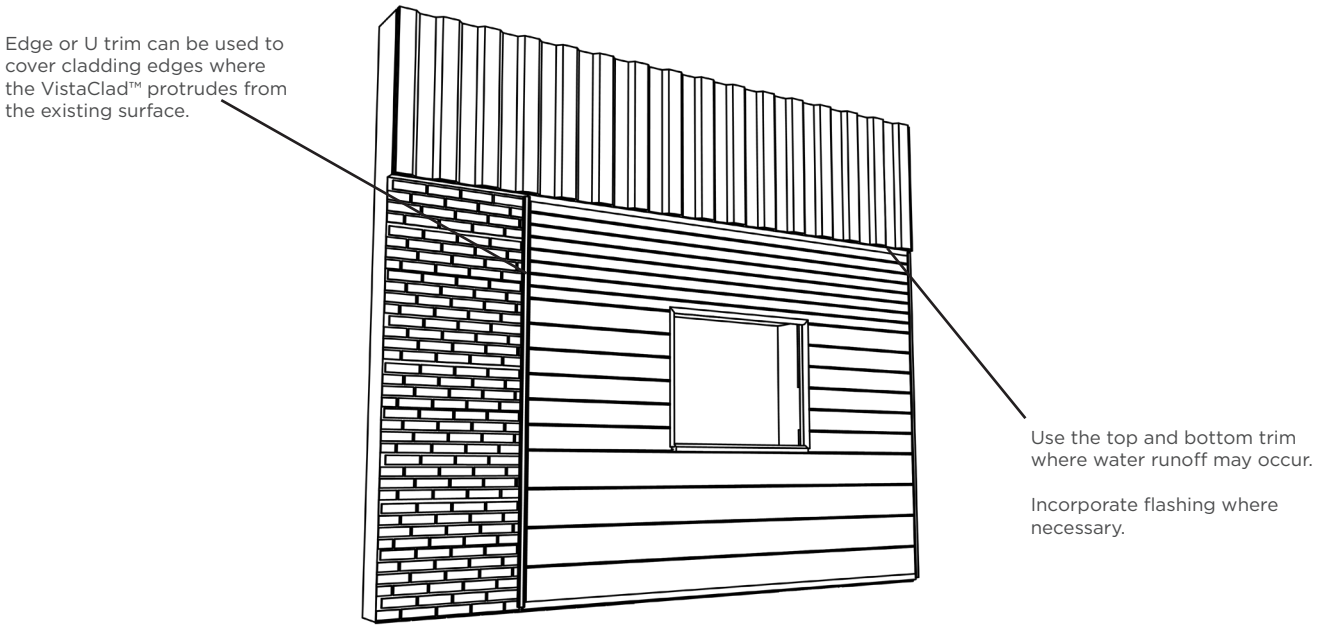

Step 3: Clip strip installation planning.

A	Measure space available **(refer to Step 2).**
B	Plan position of strips relative to laying pattern and available space **(refer to Step 2).**
C	Ensure suitable distances to substrate edges are maintained.
D	Set up plumb lines, installing substructure or manipulating substrate where necessary.
E	Install the clip strips, ensuring that the ledges of the strip are level **(refer to Step 4).**
F	Before installing, ensure that all materials are cut to the correct length **(refer to Step 5).**
G	Install trim adaptors where necessary **(refer to Step 3a).**
H	Install clip strips with adequate fasteners and spacing **(refer Step 4).**

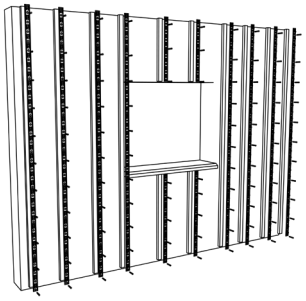

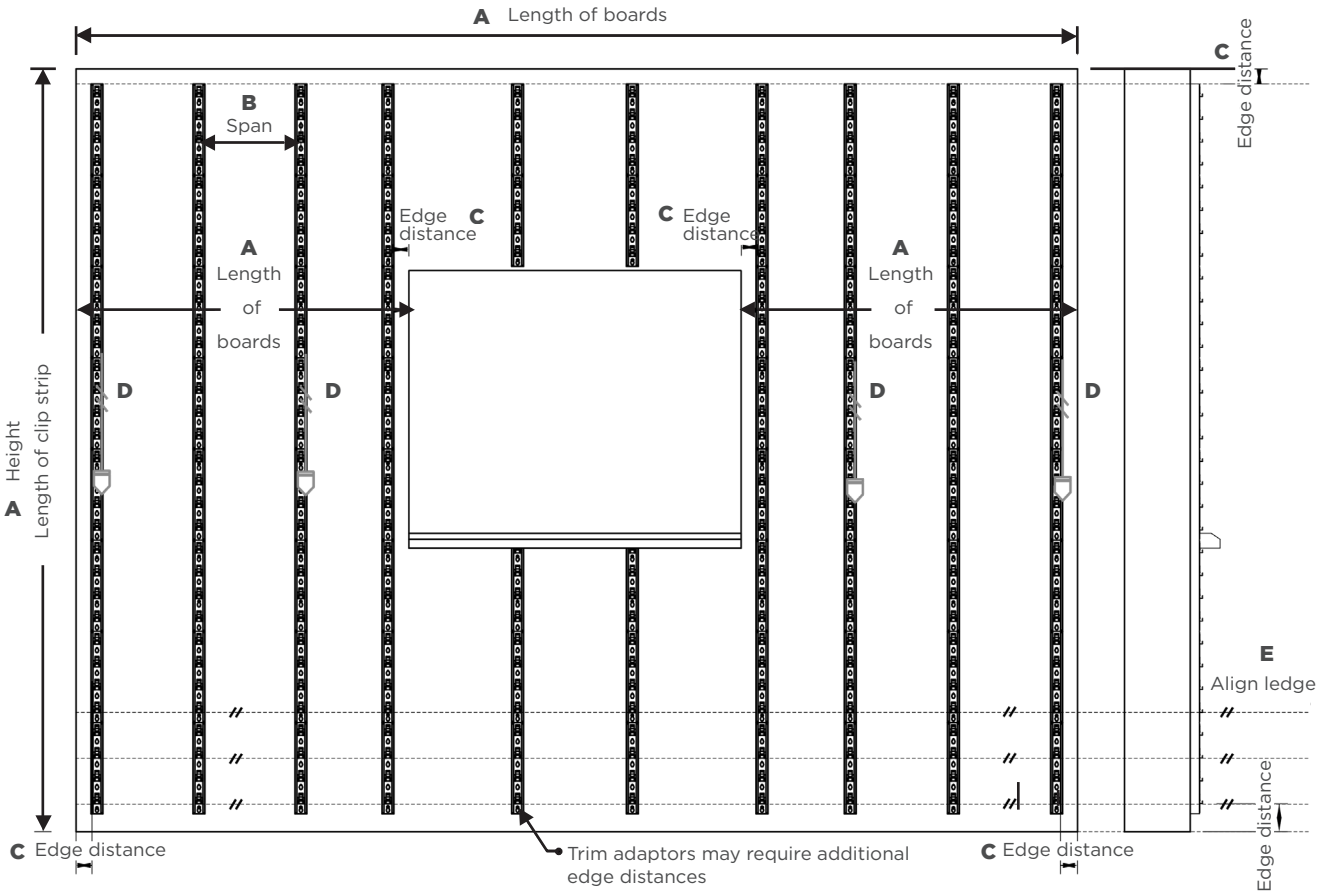

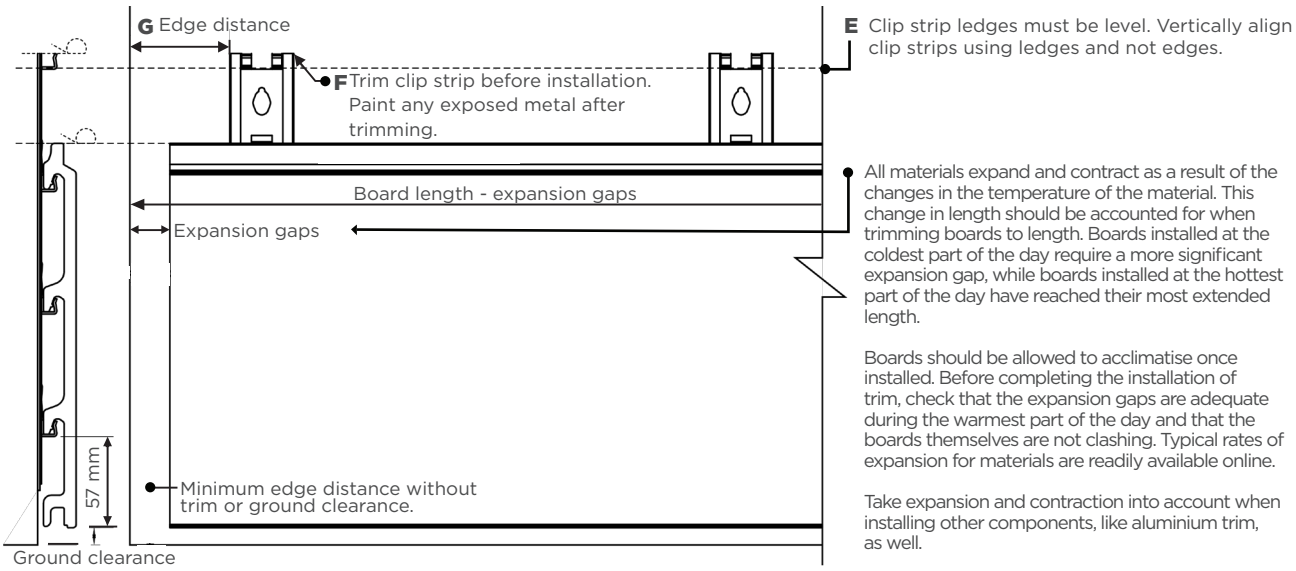

All materials expand and contract as a result of the changes in the temperature of the material. This change in length should be accounted for when trimming boards to length. Boards installed at the coldest part of the day require a more significant expansion gap, while boards installed at the hottest part of the day have reached their most extended length.

Boards should be allowed to acclimatise once installed. Before completing the installation of trim, check that the expansion gaps are adequate during the warmest part of the day and that the boards themselves are not clashing. Typical rates of expansion for materials are readily available online.

Take expansion and contraction into account when installing other components, like aluminium trim, as well.

Step 3a: Process for installing clip strip and adaptors

The trim adaptors have been designed to provide guides for the easy installation of clip strips and trim system. The adaptors either have notches to which level, plumb or chalk lines can be attached, or markers that allow the user to position the parts correctly.

Process overview

A	Set up plumb lines at the required spans and distances from wall, board or trim edges **(refer to following pages)**. Ensure substrate and/or substructure is appropriately aligned.
B	Set up level or chalk line based on the dimensions provided in the drawing **below under b.**
C	Click bottom adaptor onto level or chalk line from part b, line the adaptors up with plumb lines from **part a**.
D	Fasten the adaptors down, ensuring that they are plumb, and parallel to one another.
E	Insert the clip strips into the adaptor to the predetermined depth **(refer to next section)** and fasten to the substrate or substructure, ensuring the strips are plumb and parallel to one another **(following Step 4 above).**
F	Ensure clip strips are correct length so that the top adaptor complies with the dimensions in the below drawing under b, and in the next section **(see Step 3 for more details).**
G	Install top adaptors onto clip strips at the predetermined position (refer to next section) and fasten to clip strip **(See step 6a).**
H	Install remaining trim adaptors where necessary **(see subsequent sections).**
I	Install boards, in accordance with **Step 5 below.**
J	Aluminium trim is then clicked into place, by hand or with a soft-faced mallet, over the boards.

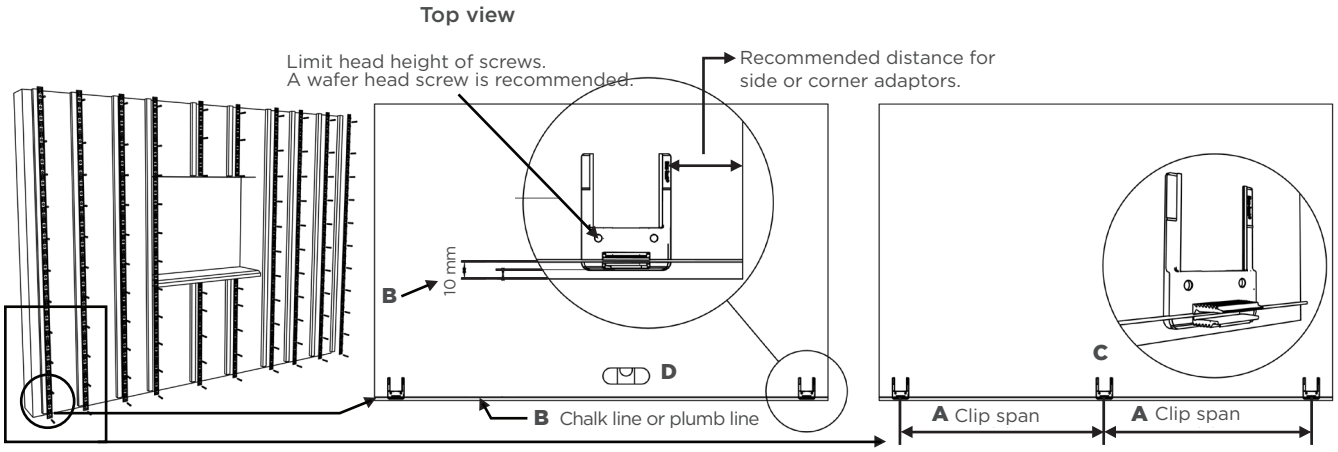

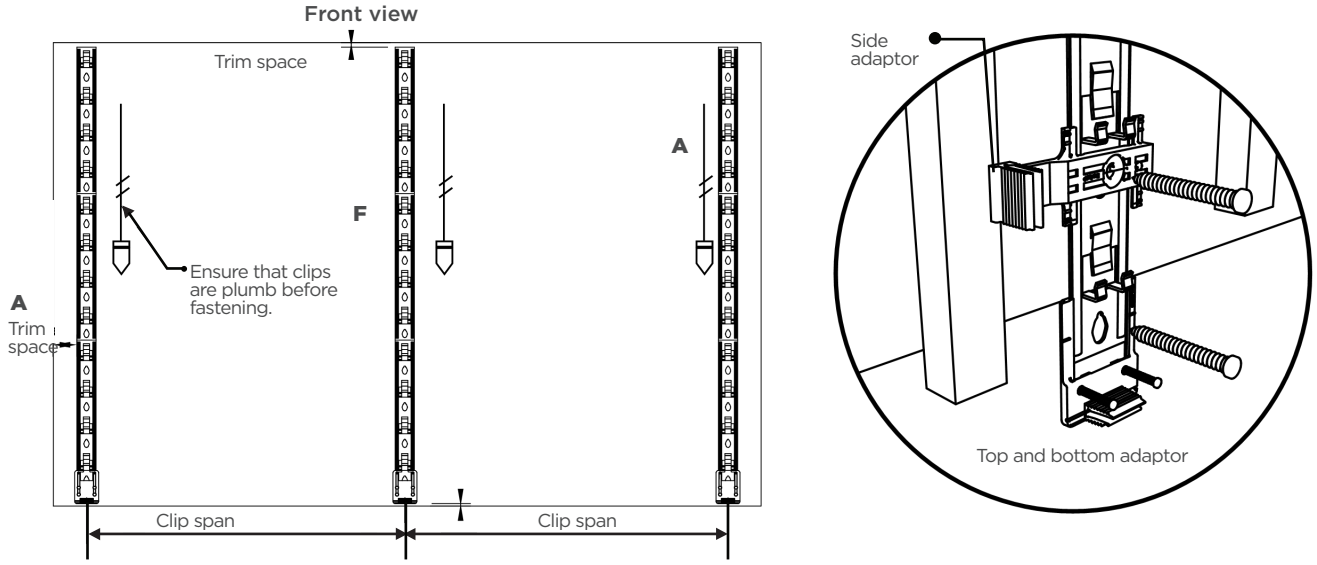

Step 4: Fastening considerations

VistaClad™ cladding strips can adapt to most fasteners. Given the variety of structural systems to which the clip strips can adapt, no single fastener can be recommended. As a result, the following fundamental information has been generalised to assist in the selection of fasteners available in the market for different structural elements.

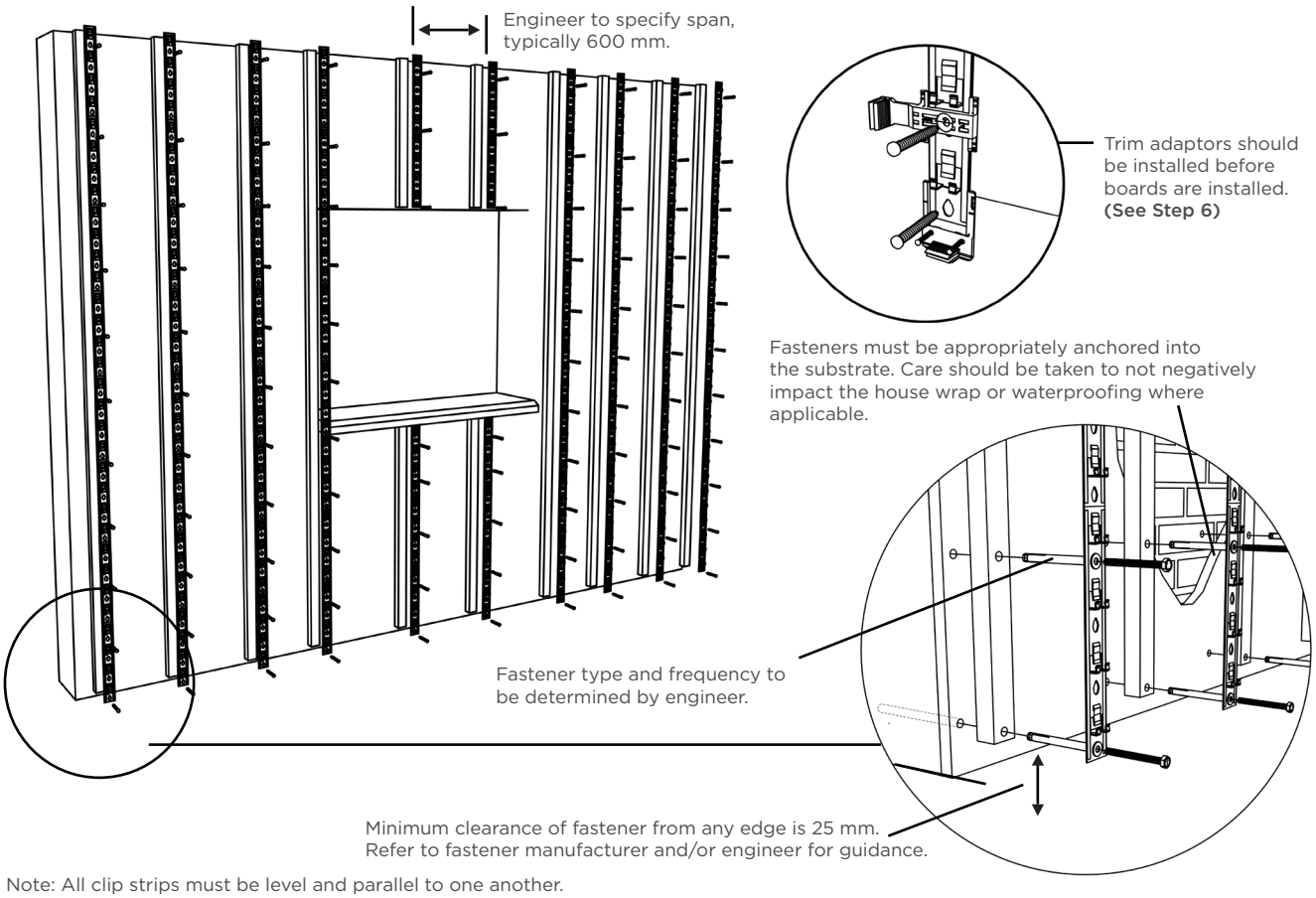

Note: All clip strips must be level and parallel to one another.

Clip strip

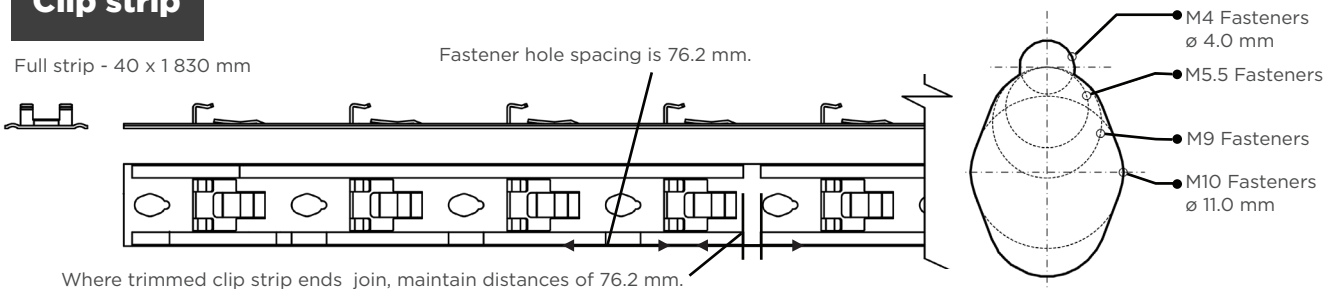

Compatible fastener types

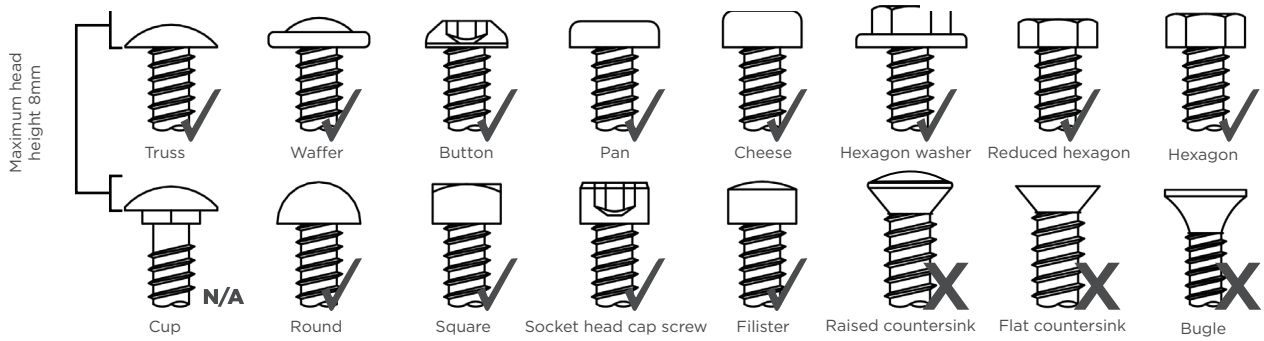

Note: Ensure fastener is suitable in terms of shear and withdrawal resistance for application.

Step 5: Board installation

Ripping boards before installation

Clip strips will most likely need to be cut to size. Exposed substrates must be coated. Depending on the available space and the planning outcome, boards may need to be ripped lengthwise. With the variability available in the system, adequate planning should ensure this is not necessary. Where it cannot be avoided, suitable profile widths need to be maintained. Due to the material type and the production method, the profiles can be successfully ripped and installed without warping or bowing. However, there are limitations to this due to the lack of symmetry in the profiles. To ensure an adequate connection between the board and clip, and to avoid warping or bowing, two points of contact (feet inserted into spring ledge) between the profile and each clip strip must be maintained. When the excess material is less than 76.2 mm, the starting and finishing points of the system should be manipulated. In addition, the tongue of the top board can be removed. In the case where the overhang is greater than 76.2 mm and alternative profiles cannot be utilised, rip the profile so that two points of contact are maintained, but limit the length of the resultant cantilever. Consider sharing the excess material between the top and bottom profiles so as to limit the length of the resultant cantilever.

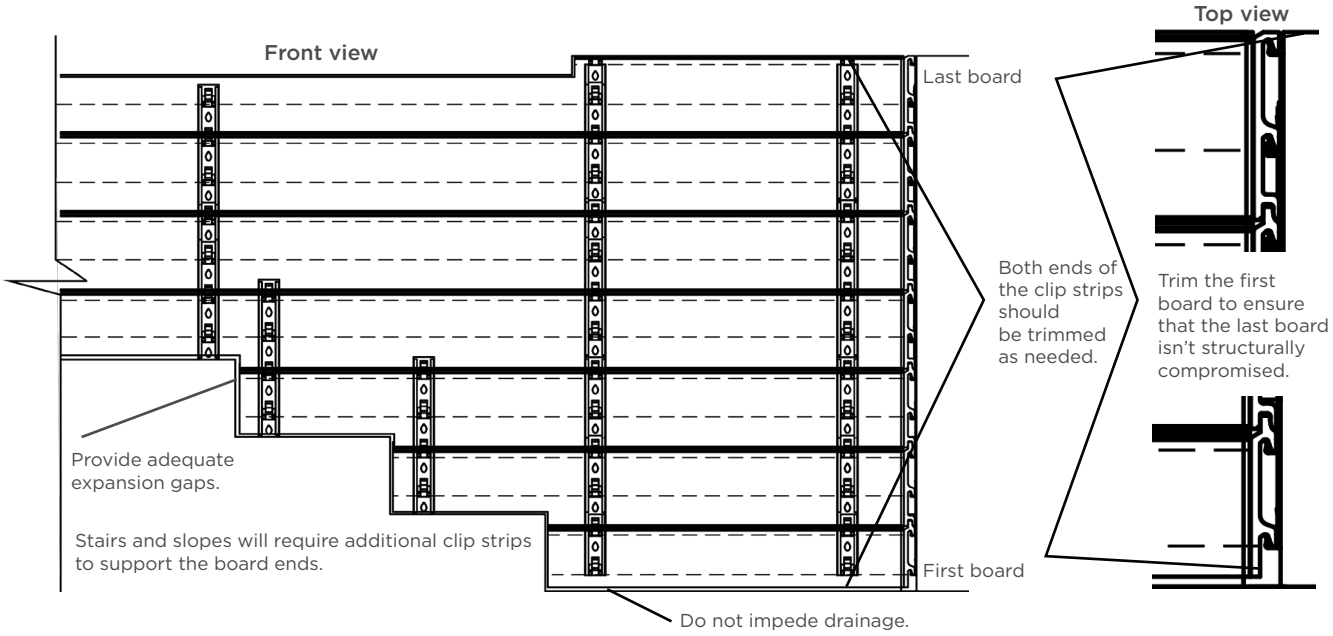

Cladding board installation process

Boards can be clipped into place by hand or by using a soft-faced mallet and block. Ensure the board edges are protected from damage during installation. Ensure boards are also fully seated once installed, to prevent boards riding up and causing eccentric loads.

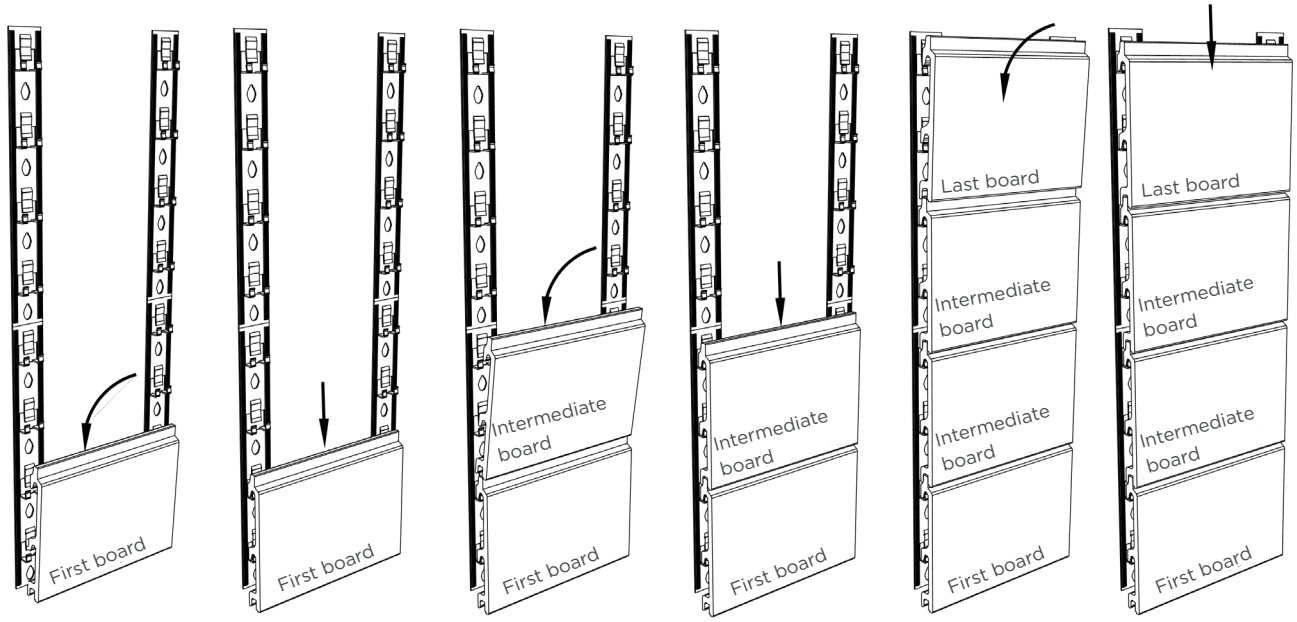

Handling long lengths may require two or more people to install.

Front view

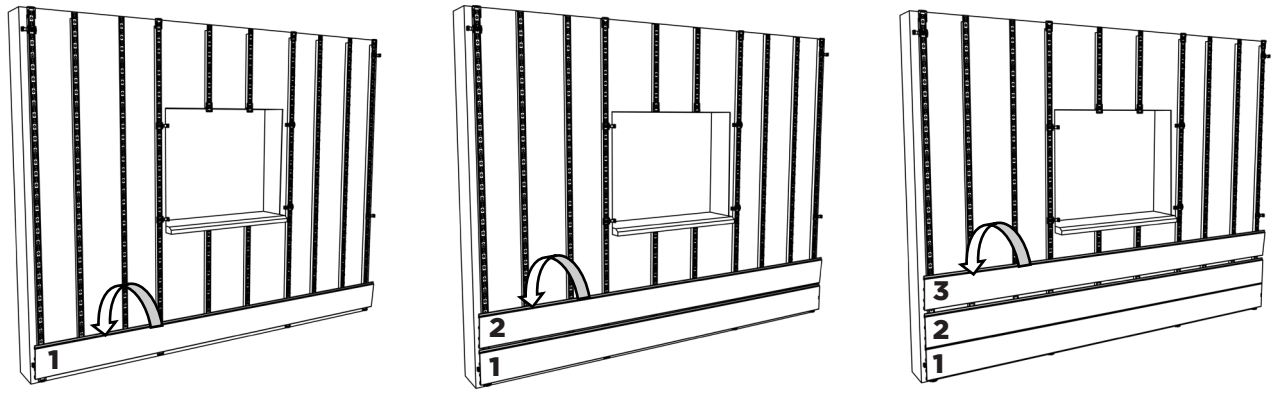

Step 6 - Trim assembly

The VistaClad™ trim system is designed to provide a cost-effective, yet easy and quick installation. The nylon trim adaptors have done away with the need for lengthy, expensive aluminium parts. The geometry has been designed to interact with the clip strips, automating the alignment for ease of use. Built-in guides allow quick levelling, and the teeth allow for depth variation and simple, click-into-place connections without the need for adhesives or fastening. Trim profiles interact with different adaptors for flexibility in application. Cavities have been incorporated into the profile to support waterproofing gaskets, and the geometry has been designed to allow vertical and horizontal trim to interact fluidly.

Isometric view

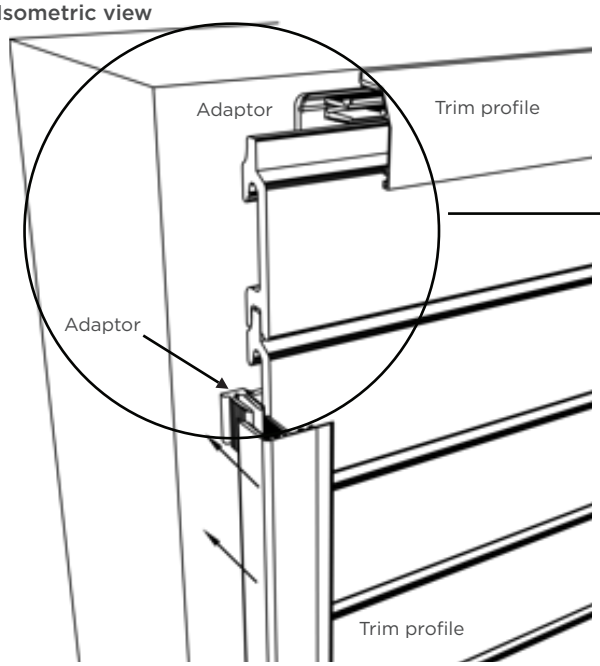

Side view

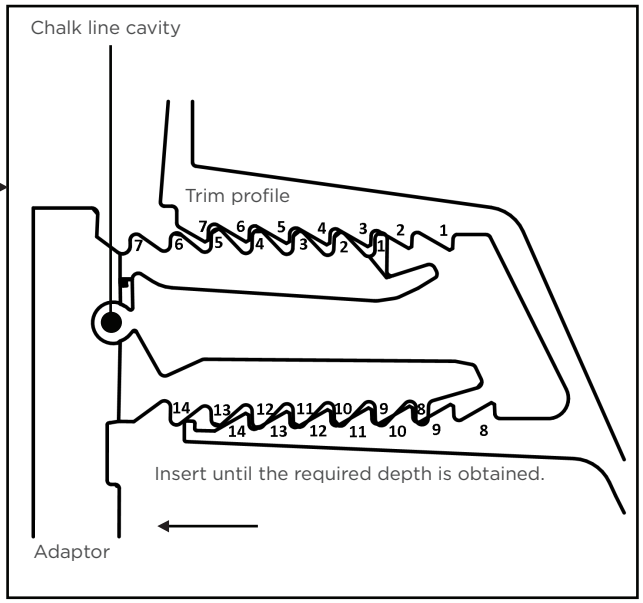

Top view

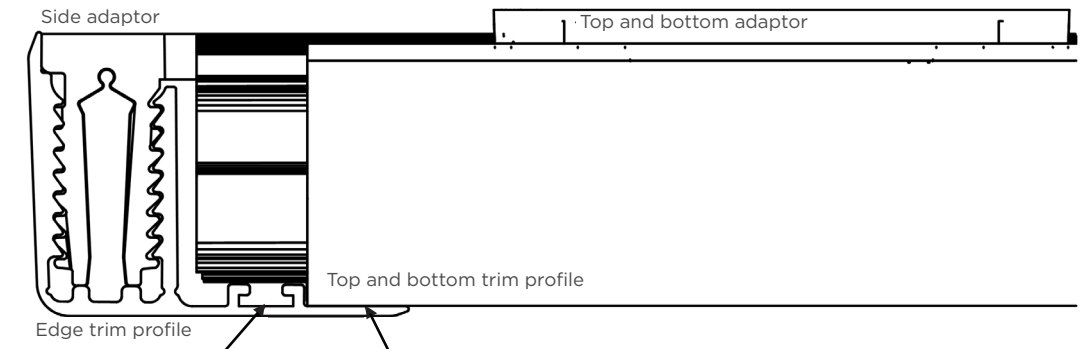

All vertical trim profiles (U-trim excluded) are designed with a lip that cover the edge of the horizontal trim.

Step 6A: Installing top and bottom trim
(expansion of Steps e & g above)

Place adaptor over fastened clip strip. Slide down so that the markers denoted MARKER 2 below align with the clip ledge. Fasten at this position. The inserted trim will finish 5 mm above the adaptor which is 50 mm above the clip ledge. The plumb line is 10.5 mm from the trim finish.

Front view

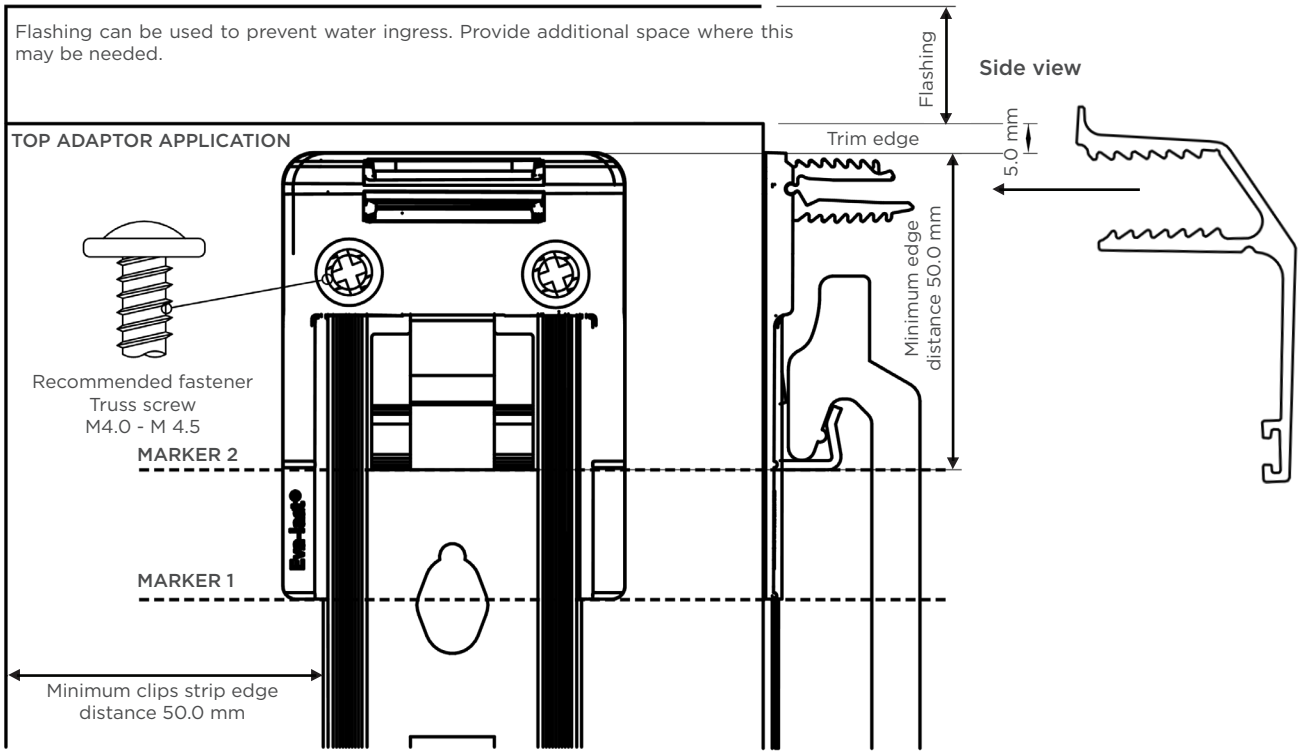

Install adaptor as outlined in Step 1 above. Slide clip strip and down so that the markers denoted MARKER 1 below align with the clip ledge. Fasten clip strip at this position. The inserted trim will finish 73 mm below the MARKER 1 position which is the same position as the clip ledge. The plumb line is 10.5 mm from the trim finish.

Front view **Side view**

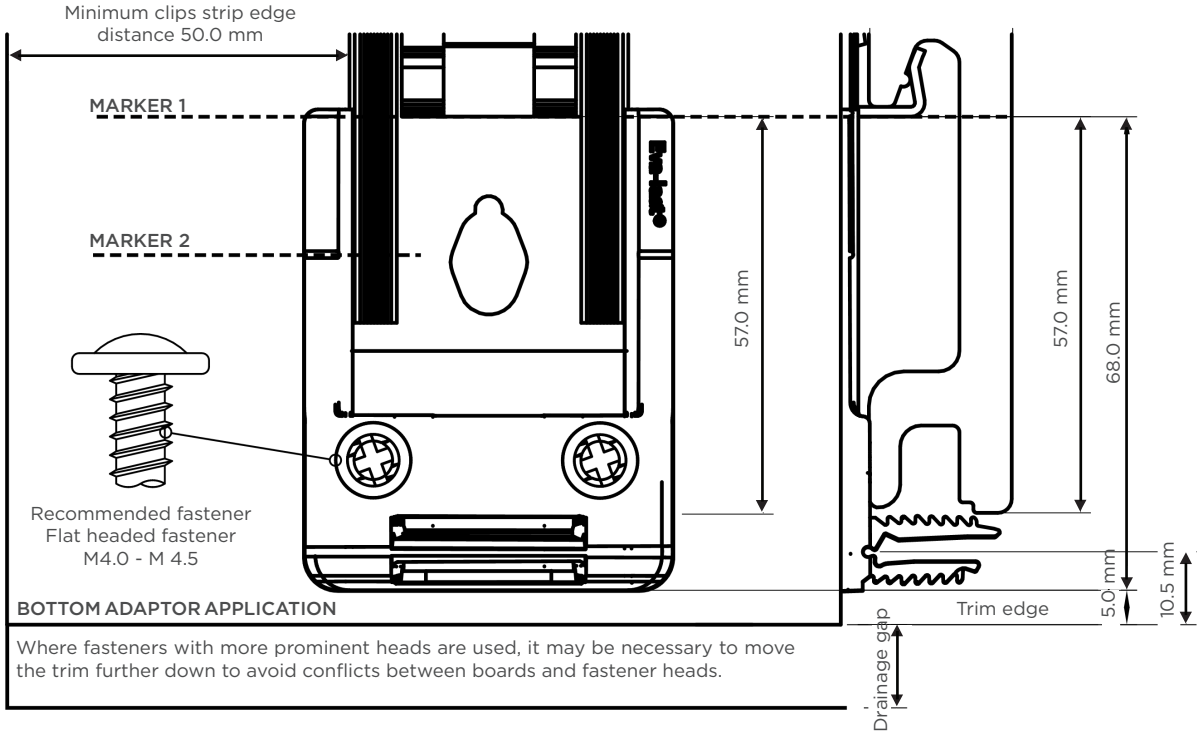

Step 6B: Installing edge trim
(expansion of Step h above)

Edge trim application

The side adaptor is fixed over the clip strip. It is fastened directly through the clip strip fastener hole and so these two Steps can be combined to reduce cost. A second fastener hole is provided where necessary to prevent rotation of the adaptor. The clip strip is fastened 50 mm from the wall edge, allowing the Edge trim to be installed flush with this surface. Two guidelines are provided to ensure adequate connection depending on the fastener utilised.

Front view

Side view

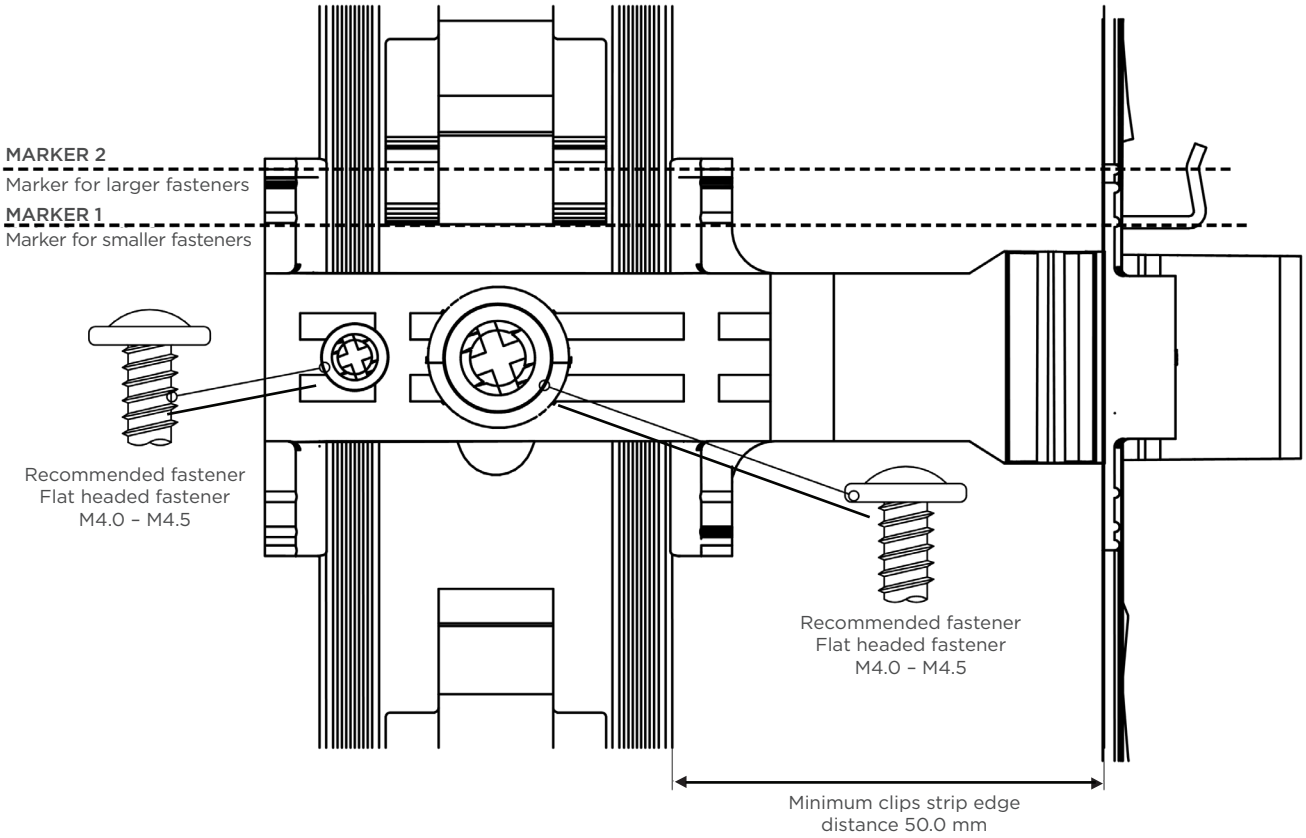

Top view

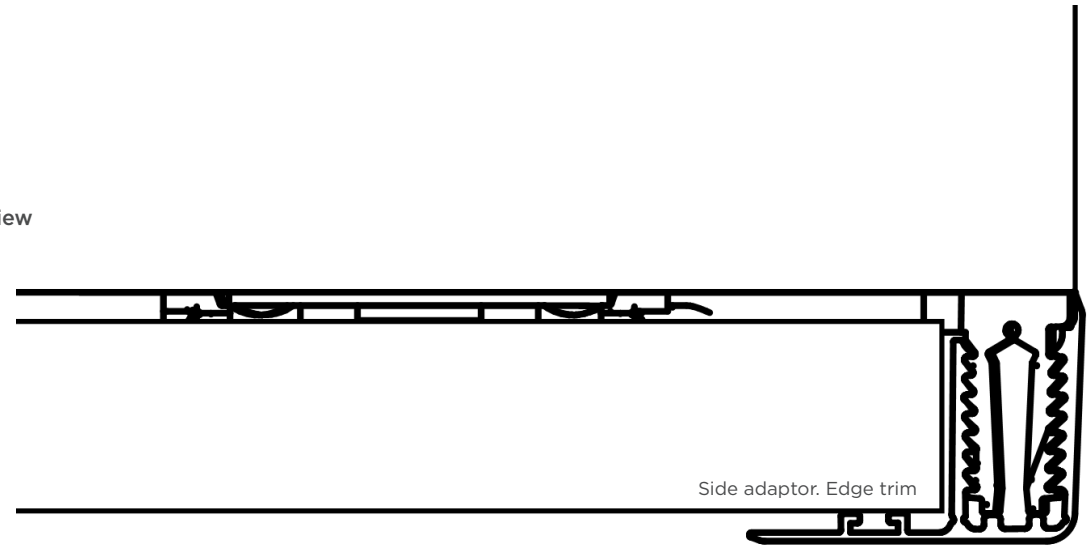

Step 6C: Installing butt-join trim
(expansion of Step h above) continued

Butt trim (U and T profiles) application

The same process is followed for the installation of the Edge trim. Care must be taken in allowing for appropriate expansion gaps of the boards where required.

Front view

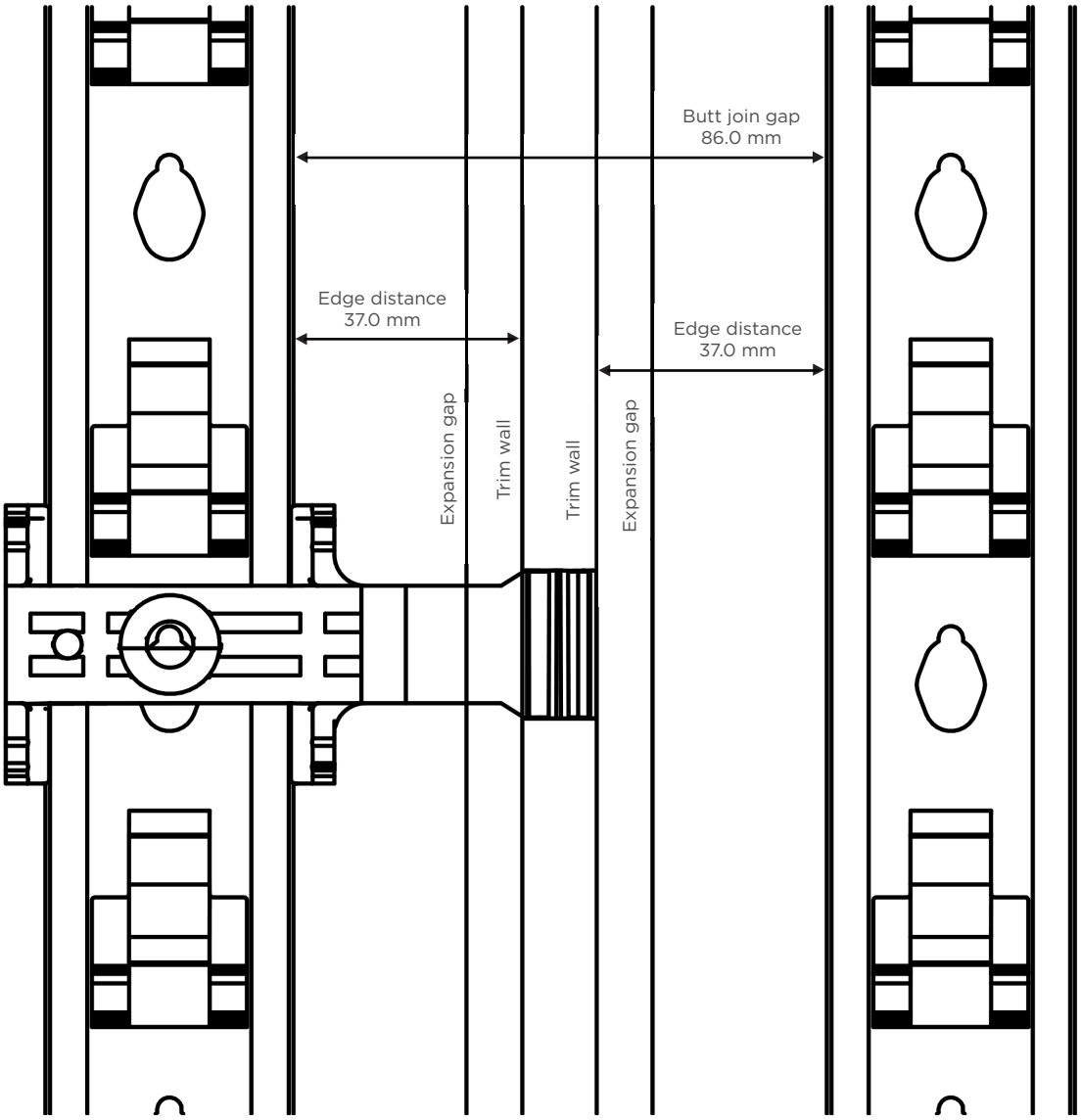

Top view

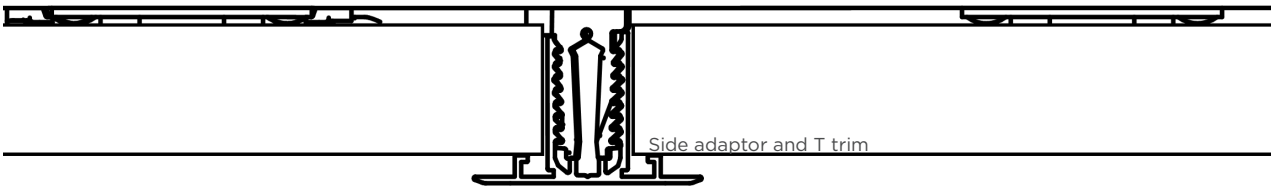

Top view

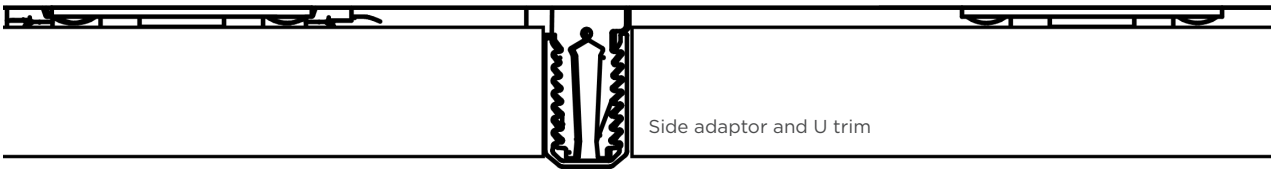

Step 6D: Installing external corner trim
(expansion of Step h above)

Corner adaptors are not installed over the clip strip. As a result, they are positioned in between the clip strip ledges where there is least interaction with the boards. Care must be taken to ensure fasteners are installed at appropriate distances from the edge of the substrate so as to prevent blow out of the anchor.

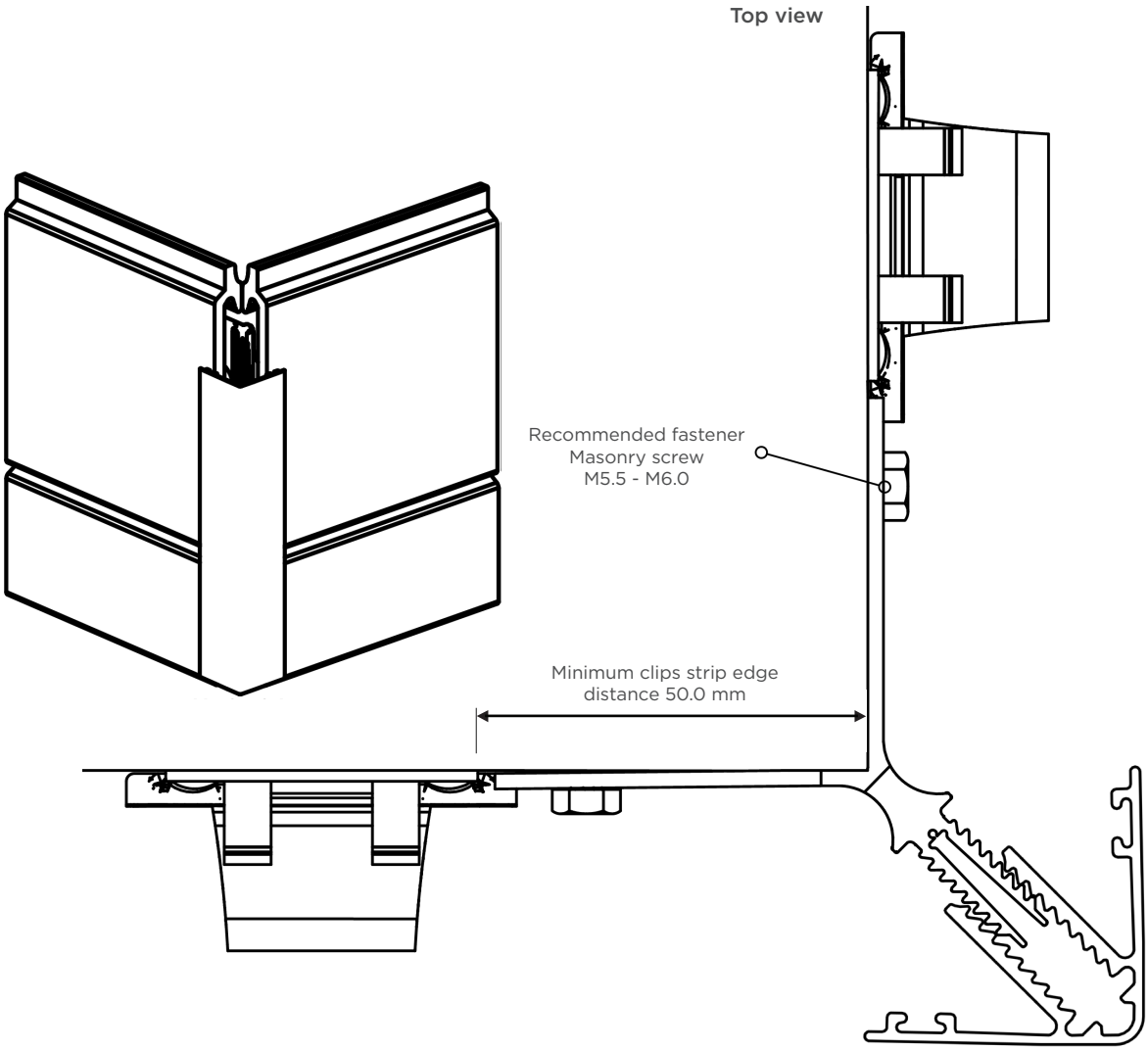

Front view

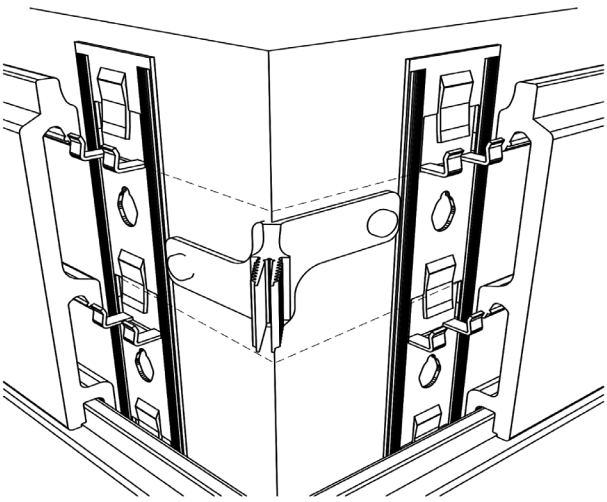

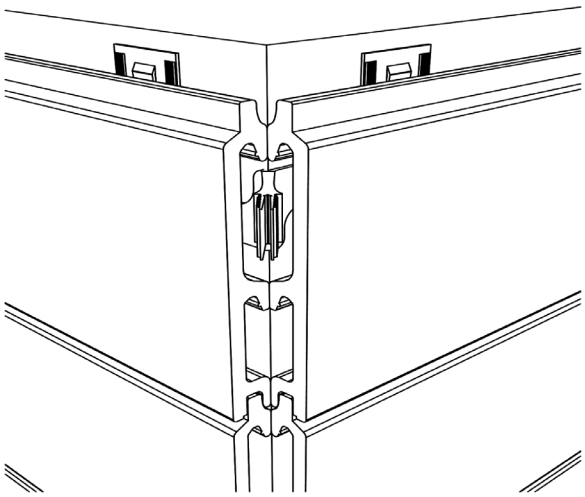

Step 6E: Installing internal corner trim
(expansion of Step h above)

The same process is followed for the installation of the external corner trim. The clip strip should be fastened 75 mm away from the corner of the substrate. The trim consists of two markers that indicate the position at which the boards installed would achieve their maximum length - depending on the expected temperature range for the site and the temperature during installation.

Top view

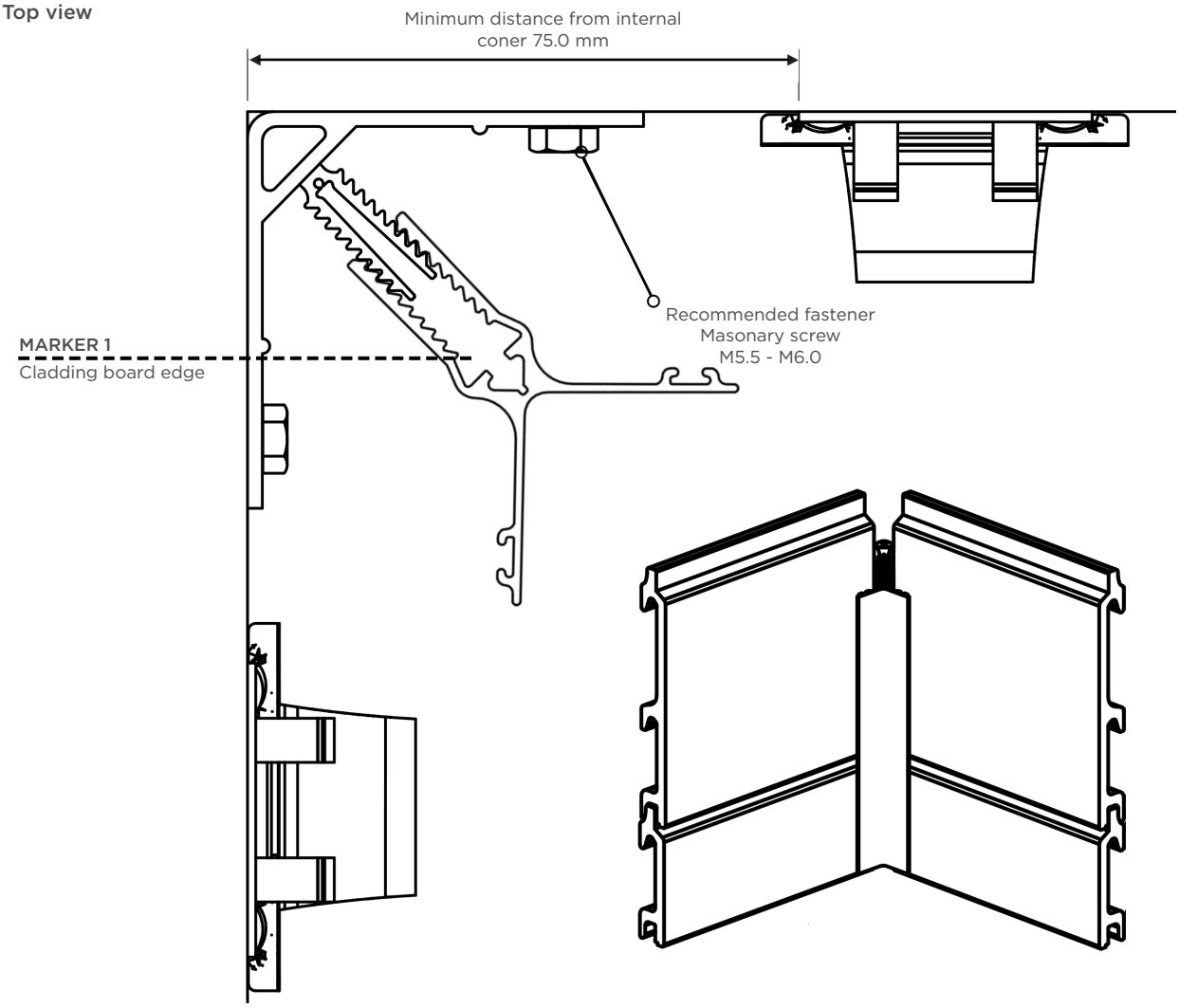

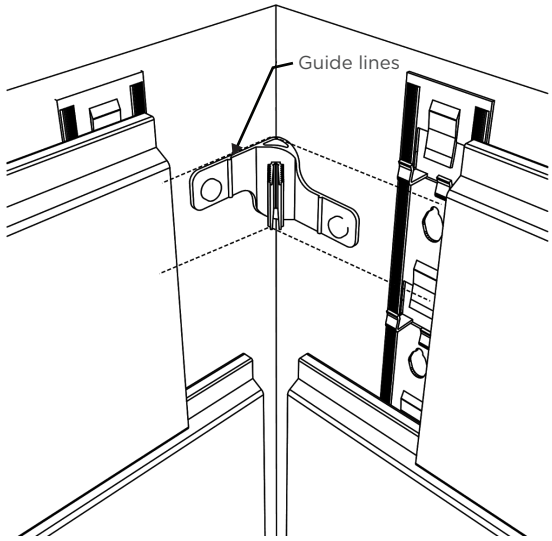

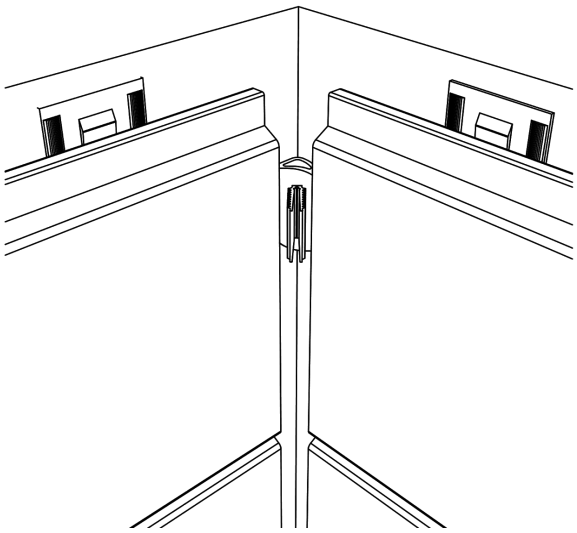

Alternative trim options

Alternative trim options are available, such as the use of aluminium angles indicated below. These alternatives have not been explicitly designed for the VistaClad™ cladding system and so care must be taken during their application. In particular, consider the impacts of expansion and contraction, fastening, weathering, ventilation, drainage and the interaction with the other elements during the planning phase. When fastening alternative trim systems, avoid fastening directly to the boards where possible. Board edges can be mitred to provide additional space and improve the allowance for expansion of the boards.

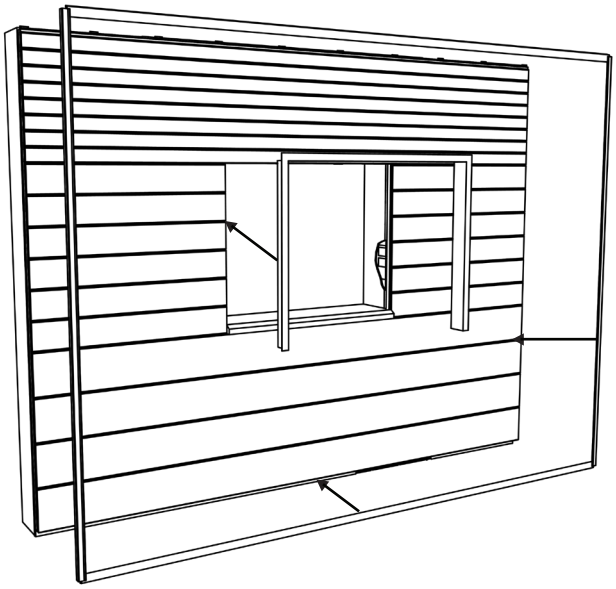

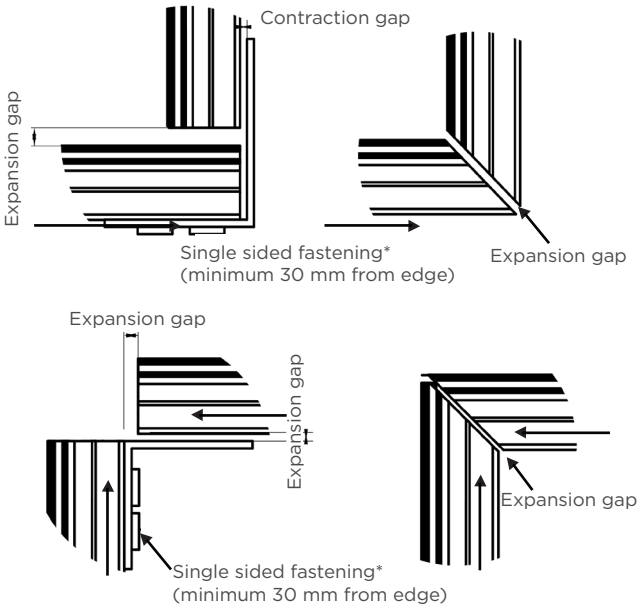

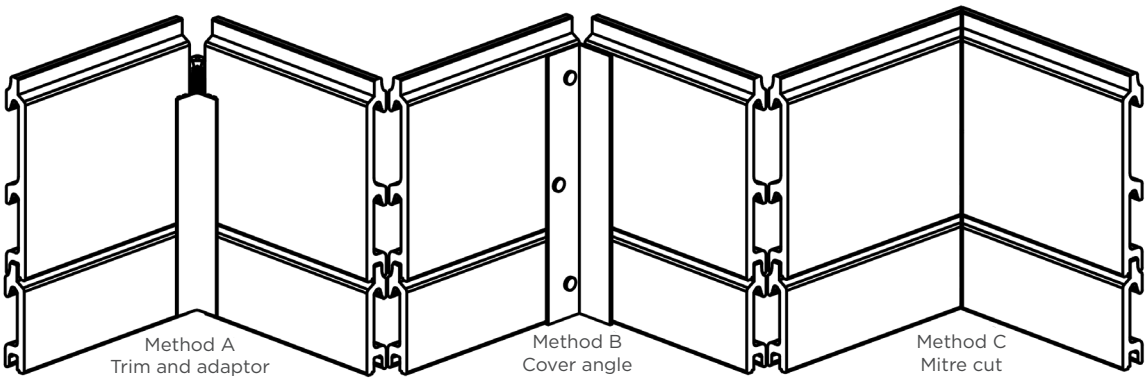

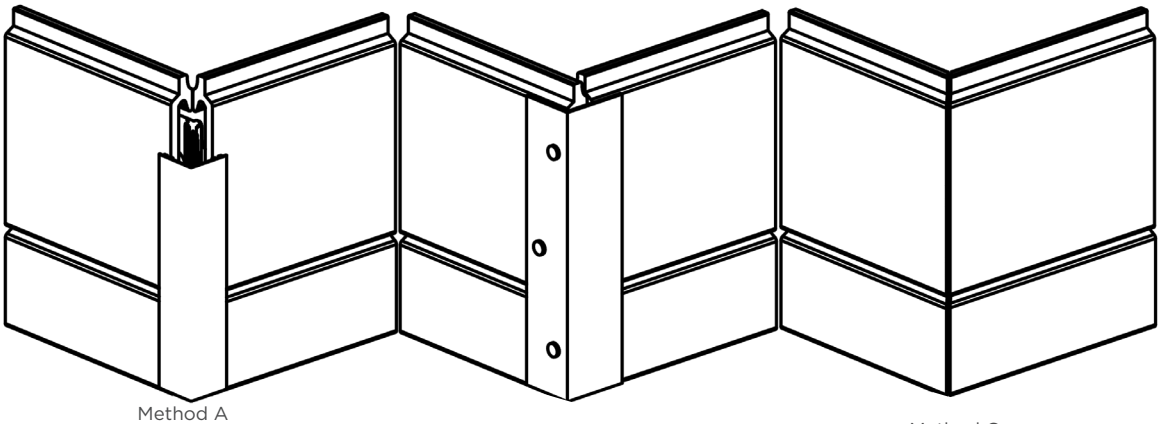

Refer to full cladding installation guide for more information.